DIFERENTIAL	7±3°C
MAX TEMPERATURE IN THE BOX	150 °C
MIN TEMPERATURE IN THE BULB	−10 °C
MAX TEMPERATURE IN THE BULB	370 °C
DIELECTRIC RIGIDITY	2000v 1s

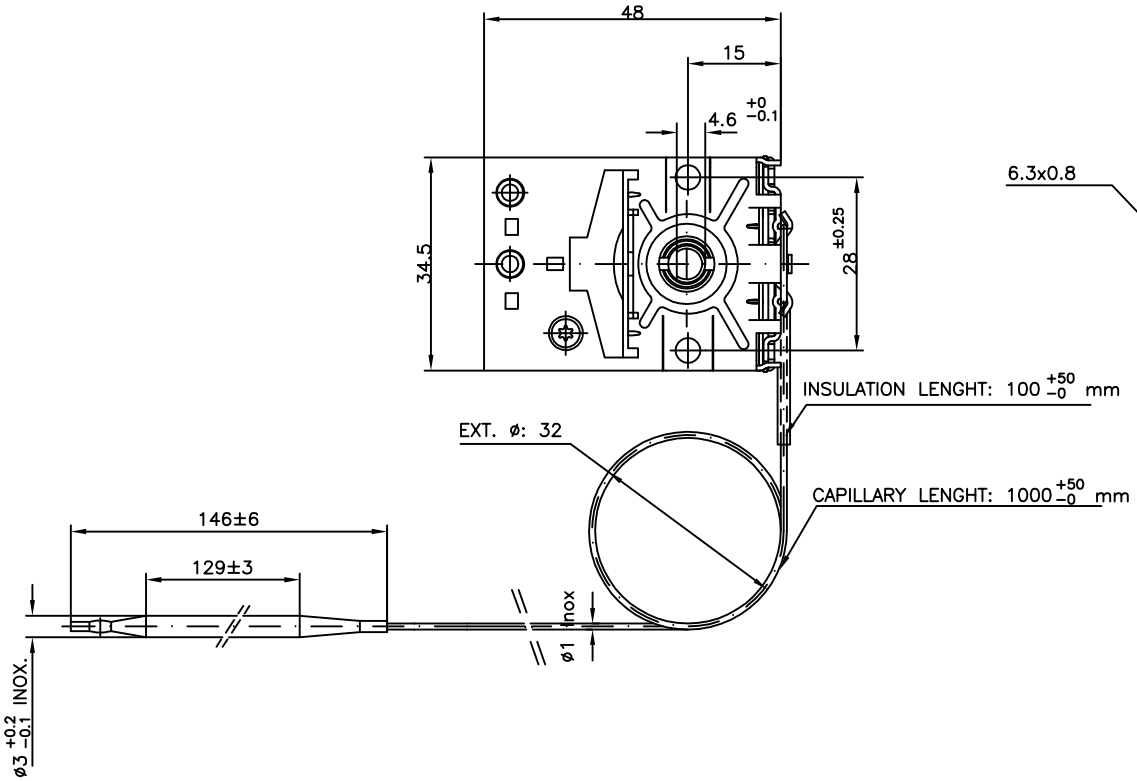

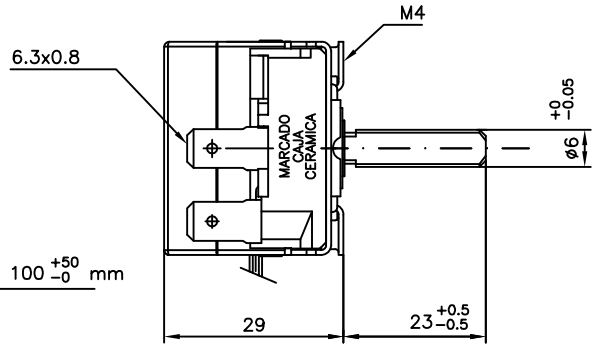

ELECTRIC DRAWING IN OFF POSTION

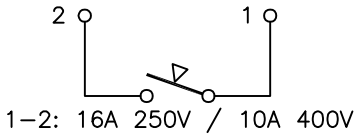

1−2: 16A 250V / 10A 400V

REGULACION

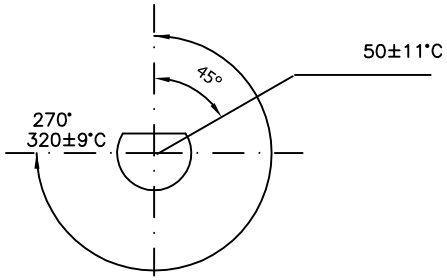

Rotation	Torque
0º-5º	2 - 8 Ncm
5º-270º	2 - 8 N·cm
<0º / >270º	> 250 N·cm

Plastic cover colour	Black
Cap. insulation colour	

APPROVALS

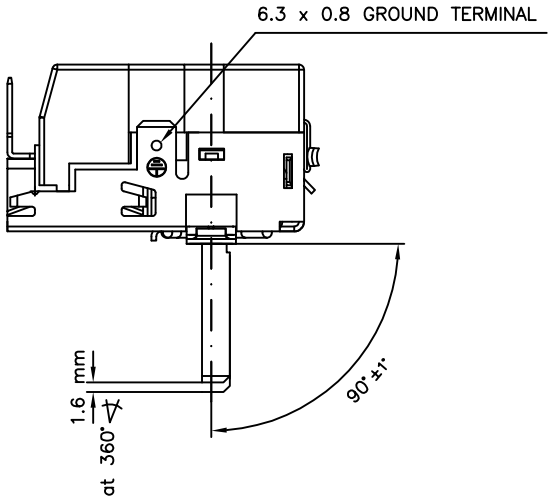

CERAMIC BOX PRINTING

T−150 EIKA Ref.

067616 Manufacture date

NOTE: 1.−THE INDICATED VALUES ARE ACCORDING TO THE DISCONNECTION TEMPERATURES

2.−THE THERMOSTAT WITH THE BULB AT 4°C AND 0°< WILL BE DISCONNECTED

EIKA	81381367
CUSTOMER Ref.	
CUSTOMER	VORCZ

N.	Aldaketaren azalpena	Data	Egilea Data	Adamec 03−13
	ELECTRIC THERMOSTAT		N° 81381367	