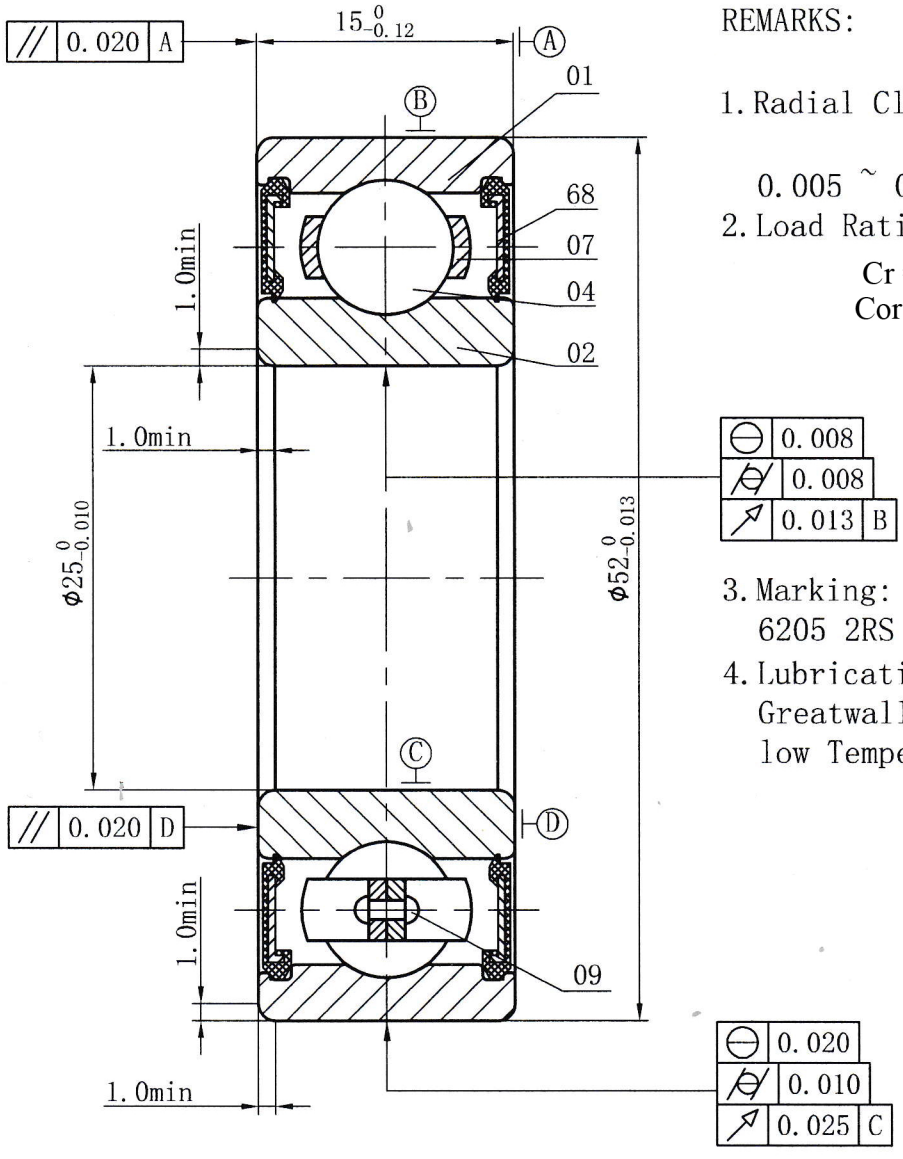

REMARKS:

1. Radial Clearance :

   0.005 ~ 0.020MM

2. Load Rating:

   Cr = 11,91kN
   Cor = 7,04 kN

3. Marking:
   6205 2RS + COM-A

4. Lubrication:
   Greatwall Shangbo
   low Temperature 35%

NUM	ITEM	QTY	MATERIAL	REMARK	HARDNESS
68	SEAL	2	NBR		
09	RIVET	9	ML15		
07	HALF CAGE	2	08F		
04	BALLS φ7.938	9	AISI52100(100Cr6)		HRC61-66
02	INNER RING	1	AISI52100(100Cr6)		HRC58-65
01	OUTER RING	1	AISI52100(100Cr6)		HRC58-65